ICLE International Center for Law & Economics

Relevant Market in the Google AdTech Case

Eric Fruits
Geoffrey A. Manne
Lazar Radić

ICLE Issue Brief 2022-06-01

ICLE | 1104 NW 15th Avenue Suite 300 | Portland, OR 97209 | 503.770.0076
icle@laweconcenter.org | @laweconcenter | www.laweconcenter.org

Relevant Market in the Google AdTech Case

Eric Fruits, Geoffrey A. Manne, & Lazar Radić*

Contents

Figures

* The authors are, respectively, Senior Scholar (and former Chief Economist), President and Founder, and Senior Scholar in Competition Policy at the International Center for Law & Economics (ICLE). ICLE has received financial support from numerous companies, foundations, and individuals with diverse and often-divergent interests in the issues discussed in this paper. Unless otherwise noted, all ICLE support is in the form of unrestricted, general support. The ideas expressed here are the author's own and do not necessarily reflect the views of ICLE's donors, scholarly affiliates, or academic advisors.

Executive Summary

Digital advertising is the economic backbone of much of the Internet. But complaints have recently emerged from a number of quarters alleging the digital advertising market is monopolized by its largest participant: Google. Most significantly, a lawsuit first filed by the State of Texas and 17 other U.S. states in 2020 alleges anticompetitive conduct related to Google's online display advertising business. The U.S. Justice Department (DOJ) reportedly may bring a lawsuit similarly focused on Google's online display advertising business sometime in 2022. Meanwhile, the United Kingdom's Competition and Markets Authority undertook a lengthy investigation of digital advertising, ultimately recommending implementation of a code of conduct and "pro-competitive interventions" into the market, as well as a new regulatory body to oversee these measures. Most recently, a group of U.S. senators introduced a bill that would break up Google's advertising business (as well as that of other large display advertising intermediaries such as Facebook and Amazon).

All of these actions rely on a crucial underlying assumption: that Google's display advertising business enjoys market power in one or more competitively relevant markets. To understand what market power a company has within the market for a given type of digital advertising, it is crucial to evaluate what constitutes the relevant market in which it operates. If the market is defined broadly to include many kinds of online and/or offline advertising, then even complete dominance of a single segment may not be enough to confer market power. On the other hand, if the relevant market is defined narrowly, it may be easier to reach the legal conclusion that market power exists, even in the absence of economic power over price.

Determining the economically appropriate market turns importantly on whether advertisers and publishers can switch to other forms of advertising, either online or offline. This includes the specific ad-buying and placement tools that the Texas Complaint alleges exist within distinct antitrust markets—each of which, it claims, is monopolized by Google. The Texas Complaint identifies at least five relevant markets that it alleges Google is monopolizing or attempting to monopolize: publisher ad servers for web display; ad-buying tools for web display; ad exchanges for web display; mediation of in-app ads; and in-app ad networks.

As we discuss, however, these market definitions put forth by the Texas Complaint and other critics of Google's adtech business appear to be overly narrow, and risk finding market dominance where it doesn't exist.

Digital advertising takes numerous forms, such as ads presented along with search results, static and video display ads, in-game ads, and ads presented in music streams and podcasts. Within digital advertising of all kinds, Google accounted for a little less than one-third of spending in 2020; Facebook accounted for about one-quarter, Amazon for 10%, and other ad services like Microsoft and Verizon accounted for the remaining third. Open-display advertising on third-party websites—the type of advertising at issue in the Texas Complaint and the primary critiques of Google's adtech

business—is a smaller subset of total digital advertising, with one estimate finding that it accounts for about 18% of U.S. digital advertising spending.

U.S. digital advertising grew from $26 billion in 2010 to $152 billion in 2020, an average annual increase of 19%, even as the Producer Price Index for Internet advertising sales declined by an annual average of 5% over the same period. The rise in spending in the face of falling prices indicates that the number of ads bought and sold increased by approximately 26% a year. The combination of increasing quantity, decreasing cost, and increasing total revenues is consistent with a growing and increasingly competitive market, rather than one of rising concentration and reduced competition.

But digital advertising is just one kind of advertising, and advertising more generally is just one piece of a much larger group of marketing activities. According to the market research company eMarketer, about $130 billion was spent on digital advertising in the United States in 2019, comprising half of the total U.S. media advertising market. Advertising occurs across a wide range of media, including television, radio, newspapers, magazines, trade publications, billboards, and the Internet.

An organization considering running ads has numerous choices about where and how to run them, including whether to advertise online or via other "offline" media, such as on television or radio or in newspapers or magazines, among many other options. If it chooses online advertising, it faces another range of alternatives, including search ads, in which the ad is displayed as a search-engine result; display ads on a site owned and operated by the firm that sells the ad space; "open" display ads on a third-party's site; or display ads served on mobile apps.

Although advertising technology and both supplier and consumer preferences continue to evolve, the weight of evidence suggests a far more unified and integrated economically relevant market between offline and online advertising than their common semantic separation would suggest. What publishers sell to advertisers is access to consumers' attention. While there is no dearth of advertising space, consumer attention is a finite and limited resource. If the same or similar consumers are variously to be found in each channel, all else being equal, there is every reason to expect advertisers to substitute between them, as well.

The fact that offline and online advertising employ distinct processes does not consign them to separate markets. The economic question is whether one set of products or services acts as a competitive constraint on another; not whether they appear to be descriptively similar. Indeed, online advertising has manifestly drawn advertisers from offline markets, as previous technological innovations drew advertisers from other channels before them. Moreover, while there is evidence that, in some cases, offline and online advertising may be complements (as well as substitutes), the distinction between these is becoming less and less meaningful as the revolution in measurability has changed how marketers approach different levels of what is known as the "marketing funnel."

The classic marketing funnel begins with brand-building-type advertising at the top, aimed at a wide audience and intended to promote awareness of a product or brand. This is followed by increasingly

targeted advertising that aims to give would-be customers a more and more favorable view of the product. At the bottom of this funnel is an advertisement that leads the customer to purchase the item. In this conception, for example, display advertising (to promote brand awareness) and search advertising (to facilitate a purchase) are entirely distinct from one another.

But the longstanding notion of the "marketing funnel" is rapidly becoming outdated. As the ability to measure ad effectiveness has increased, distinctions among types of advertising that were once dictated by where the ad would fall in the marketing funnel have blurred. This raises the question whether online *display* advertising constitutes a distinct, economically relevant market from online *search* advertising, as the Federal Trade Commission, for example, claimed in its 2017 review of the Google/DoubleClick merger.

The Texas Complaint adopts a non-economic approach to market definition, defining the relevant market according to similarity between product functions, not by economic substitutability. It thus ignores the potential substitutability between different kinds of advertising, both online and offline, and hence the constraint these other forms of advertising impose on the display advertising market.

If advertisers faced with higher advertising costs for open-display ads would shift to owned-and-operated display ads or to search ads or to other media altogether—rendering small but significant advertising price increases unprofitable—then these alternatives must be included in the relevant antitrust market. Similarly, if publishers faced with declining open-display ad revenues would quickly shift to alternative such as direct placement of ads or sponsorships, then these alternatives must be included in the relevant market, as well.

If advertisers and publishers are faced with a wide range of viable alternatives and the market is broadly defined to include these alternatives, then it is not clear that any single firm can profitably exercise monopoly power—no matter what its market share is in one piece of the broader market. Similarly, it is not clear whether "consumers" (e.g., advertisers, publishers, or users) have suffered any economic harm.

With a narrow focus on "open display," it is quite possible that Google's dominance can be technically demonstrated. But if, as suggested here, "open display" is really just a small piece of larger relevant market, then any fines and remedies resulting from an erroneously narrow market definition are as likely to raise the cost of business for advertisers, publishers, and intermediaries as they would be to increase competition that benefits market participants.

I. Introduction

Digital advertising is the economic backbone of much of the Internet. It provides websites and apps a means to monetize their products without having to charge user fees, thus allowing entertaining and informative content to be offered free of charge. Targeted advertising allows companies to inform potential customers of new products and enables them to compete with popular incumbents. Moreover, targeted ads avoid wasting both advertisers' resources and users' time hawking products and services in which a given user is unlikely to be interested.

Most of today's digital advertising appears on heavily trafficked "owned-and-operated" sites such as TikTok, Instagram, Google Search, YouTube, and Amazon, which are owned by the same company (i.e., ByteDance, Meta, Alphabet, Alphabet, and Amazon, respectively) that facilitates the site's advertising. A much smaller slice of advertising space is supplied by independent publishers, such as *The New York Times*, MLB.com, and FOXNews.com. Placement of these "open display" ads is often facilitated by intermediaries that match advertisers and websites automatically, targeting ads to the users for whom they are most relevant. This intermediation between online advertisers and publishers has advanced enormously over the past three decades and has grown into a $23 billion industry.

Some allege, however, that the digital advertising market is monopolized by its largest participant: Google. A lawsuit filed in December 2020—initially by the State of Texas and nine other U.S. states with Republican attorneys general, and later joined by several other states—alleges anticompetitive conduct related to Google's online display advertising business.[1] This action is one of three currently pending lawsuits brought against Google by government antitrust enforcers in the United States; the other two relate to Google's distribution agreements and search design.[2] It has been reported that the U.S. Justice Department (DOJ) may bring a lawsuit similarly focused on Google's online display advertising business sometime in 2022.[3]

The Texas Complaint arrived amid heightened public scrutiny of Google's conduct in digital advertising from a number of foreign and domestic sources, including a year-long study by the United Kingdom's Competition and Markets Authority (CMA). The CMA investigation of digital advertising (including search and social-media advertising) has thus far produced recommendations for a code of conduct and "pro-competitive interventions" into the market, as well as a new regulatory

---

[1] Third Amended Complaint, *In re: Google Digital Advertising Antitrust Litigation*, No. 1:21-cv-06841-PKC (S.D.N.Y Nov. 12, 2021) [hereinafter "Texas Complaint"]. The Texas Complaint was originally filed in Texas in December of 2020 but, along with 19 related cases filed by private plaintiffs around the country, was moved by the U.S. Judicial Panel on Multidistrict Litigation to New York in August of 2021.

[2] *See* Complaint, *United States v. Google LLC*, No. 1:20-CV-03010 (D.D.C. Oct. 20, 2020); *see also*, Complaint, *State of Colorado, et al. v. Google LLC*, 1:20-CV-03715 (D.D.C. Dec. 17, 2020).

[3] *See* David McLaughlin, *U.S. DOJ Readying Google Antitrust Lawsuit Over Ad-Tech Business*, BLOOMBERG (Sep. 1, 2021), https://www.bloomberg.com/news/articles/2021-09-01/u-s-doj-readying-google-antitrust-lawsuit-over-ad-tech-business.

body to oversee these measures.[4] The Australian Competition and Consumer Commission is also conducting its own study of the digital advertising market,[5] and both houses of the U.S. Congress have held hearings on the market in the past two years.[6] In October 2020, the Democratic majority staff of the U.S. House Judiciary Committee's Subcommittee on Antitrust, Commercial, and Administrative Law issued a report that recommended, among other things, regulation of the display advertising market.[7] And, most recently, a group of U.S. senators introduced a bill that would break up Google's advertising business (as well as that of other large display advertising intermediaries such as Facebook and Amazon).[8]

Also of note, in 2020 the Omidyar Network published a paper alleging anticompetitive practices within Google's display advertising business,[9] based on the interim report produced by the CMA during its investigation.[10] Styled as a "roadmap" for a digital-advertising antitrust case against Google, the Omidyar Network report offers more detailed versions of some of the allegations and arguments that are left merely implicit in the Texas Complaint.[11]

The purpose of this paper is to consider what the "relevant market" is for antitrust investigations into online display advertising—in other words, what other products and companies it is reasonable to believe may compete with Google's display advertising offerings. In considering whether Google has market power in the display advertising market, it is crucial to know if advertisers and publishers

---

[4] U.K. Competition & Markets Authority, *Online Platforms and Digital Advertising, Market Study Final Report* (Jul. 1, 2020) at 21 and 37, *available at* https://www.gov.uk/cma-cases/online-platforms-and-digital-advertising-market-study [hereinafter "CMA Final Report"].

[5] Australian Competition & Consumer Commission, *Digital Advertising Services Inquiry, Final Report* (Aug. 2021), *available at* https://www.accc.gov.au/system/files/Digital%20advertising%20services%20inquiry%20-%20final%20report.pdf; Australian Competition & Consumer Commission, *Ad Tech Inquiry, Issues Paper* (Mar. 10, 2020), *available at* https://www.accc.gov.au/focus-areas/inquiries-finalised/digital-advertising-services-inquiry/issues-paper.

[6] U.S. House Judiciary Committee, Subcommittee on Antitrust, Commercial and Administrative Law, I*nvestigation of Competition in Digital Markets, Majority Staff Report and Recommendations* (Oct. 4, 2020), *available at* https://judiciary.house.gov/uploadedfiles/competition_in_digital_markets.pdf [hereinafter "House Majority Staff Report"]; U.S. Senate Judiciary Committee, Subcommittee on Antitrust, Competition Policy and Consumer Rights, *Hearing on "Stacking the Tech: Has Google harmed competition in online advertising?"* (Sep. 15, 2020), *available at* https://www.judiciary.senate.gov/meetings/stacking-the-tech-has-google-harmed-competition-in-online-advertising.

[7] House Majority Staff Report, *id*. at 20.

[8] *See* Press Release, *Lee Introduces Digital Advertising Act* (May 19, 2022), https://www.lee.senate.gov/2022/5/lee-introduces-digital-advertising-act.

[9] Fiona M. Scott Morton and David C. Dinielli, *Roadmap for a Digital Advertising Monopolization Case Against Google*, Omidyar Network (May 17, 2020) at 15, *available at* https://omidyar.com/wp-content/uploads/2020/09/Roadmap-for-a-Case-Against-Google.pdf [hereinafter "Omidyar *Roadmap*"].

[10] U.K. Competition & Markets Authority, *Online Platforms and Digital Advertising, Market Study Interim Report* (Dec. 18, 2019), *available at* https://assets.publishing.service.gov.uk/media/5ed0f75bd3bf7f4602e98330/Interim_report_-_web.pdf.

[11] For this reason, and because it may influence further lawsuits and regulatory interventions in the digital advertising market, including the DOJ's, we assess this report and use its arguments to fill out portions in which the Texas Complaint is vague or terse about its allegations.

can switch to other forms of advertising, either online or offline. This includes the specific ad-buying and placement tools that the Texas Complaint alleges exist within distinct antitrust markets—each of which, it claims, is monopolized by Google.

To assess these questions, this paper gives an overview of the digital-advertising market and the technological "stack" that most online open-display advertising runs through. It then considers substitutability at different layers of abstraction, to understand whether it is reasonable to take what may be the narrowest definition possible of the relevant market.

II. Overview of digital advertising

Open-display advertising refers to ads placed on websites and facilitated by a third-party intermediary. It is the focus of this paper, as well as of the Texas Complaint, the Omidyar report, and the sections of the CMA market study to which this paper refers. Section IV discusses where open-display advertising fits in the broader panoply of advertising options.

Advertisers in the open-display market typically include businesses trying to sell a product or service, nonprofits seeking to raise funds or to change people's views or behavior, and governmental agencies attempting to inform the public. These organizations buy space to display their advertising, as well as services that help them target those ads to the most relevant users. They are thus referred to as the "demand side" of the market.

Publishers in the online display advertising market include websites and digital apps that provide (and often create) online content that users want to watch, read, or listen to. Publishers generate some or all their revenue by selling some of the available space on their sites to advertisers. Publishers are therefore referred to as the "supply side" or "sell side" of the market. Here, a publisher's "inventory" consists of the designated space on a site's pages reserved for the publication of advertising content and offered up for sale in the advertising market.

Note that the term "publisher" refers to all websites, regardless of what type of content they carry: a blog that provides nothing but posts about kittens is a publisher just as much as *The New York Times* is. Social-media platforms such as Facebook, Instagram, and YouTube are also publishers. Their available ad inventory includes designated posts in news feeds or ads inserted into the user-created videos and other content they host. A publisher's "users" are those who view or interact with the publisher's content and who the advertisers want to take action, such as by buying an advertiser's product.

Finally, the intermediaries in this industry are digital businesses like Google that sit in between the supply and demand sides. Intermediaries provide both the brokerage function that enables advertisers and publishers to do business with each other, as well as various services to help advertisers increase the return on their investment (such as advertising campaign management and data analytics) and to help publishers increase the value (and price) of their ad-space inventory.

Advances in digital advertising have made it easier for smaller businesses to advertise—a function not just of the reduced price of online ads (brought about by the Internet's massive increase in the supply of advertising inventory), but also of the ways that ad intermediaries have cut costs throughout the advertising process by revolutionizing ad-placement and consumer-targeting technologies.[12] Automated auctions, targeting, and campaign design mean that the fixed costs of advertising are much lower than they once were, such that small-scale advertising campaigns by small organizations that wish to target a narrow group of users are now much more viable.

Notably, less than 20% of Facebook's advertising revenues reportedly come from the largest 100 firms advertising on its sites, with the rest of its $70 billion in 2018 revenues coming from the 8 million other businesses that advertise on the platform.[13] This stands in contrast to the makeup of the television advertising market, for example, where the largest 200 advertisers account for almost 80% of broadcast TV advertising.[14] The advent of online advertising hasn't reduced the spending of large advertisers, but they must now compete for ad inventory with the "long tail" of small advertisers.[15]

There are important distinctions among different kinds of ad sales in online display. Some ad space is sold directly by publishers to advertisers or ad agencies. This accounted for about 20% of online open-display advertising sold in the United Kingdom in 2017, according to a report prepared for the U.K. government.[16] The remainder is sold *programmatically*, either through *direct* or *indirect* channels. In *programmatic direct* sales, some relationship already exists between the advertiser and the seller. This can include participation in a private auction where only selected buyers are allowed to

---

[12] *See, e.g.*, Catherine Tucker, *Competition in the Digital Advertising Market*, in GLOBAL ANTITRUST INSTITUTE REPORT ON THE DIGITAL ECONOMY (Joshua D. Wright & Douglas H. Ginsburg eds., 2020) at 679, 697 ("Self-service ad platforms make the process of launching and monitoring a campaign easier and less costly for advertisers. These self-service tools allow ad venues to expand their set of potential customers to include businesses with lower advertising budgets. In addition to being less costly, advertisers benefit from the additional flexibility self-service platforms provide, from the reduction or elimination of the requirement for minimum ad spend, and from the timely feedback they obtain on the performance of their ad campaigns.").

[13] Ben Thompson, *Apple and Facebook*, STRATECHERY (Jun. 29, 2020), https://stratechery.com/2020/apple-and-facebook.

[14] Bradley Johnson, *Big Spenders on a Budget: What the Top 200 U.S. Advertisers Are Doing to Spend Smarter*, ADAGE (Jul. 5, 2015), https://adage.com/article/advertising/big-spenders-facts-stats-top-200-u-s-advertisers/299270. *See also Top Advertisers Spend "Smart,"* WARC (Jul. 7, 2015), https://web.archive.org/web/20190904110605/https://www.warc.com/NewsAndOpinion/News/35035 ("So, for example, the top 200 made up almost 80% of all broadcast network TV advertising and very nearly two thirds of cable TV network advertising. But they accounted for just 25.3% of spending in newspapers, 41.9% of spending in magazines and 40.6% of internet display expenditure.").

[15] Thompson, *supra* note 13.

[16] Stephen Adshead, Grant Forsyth, Sam Wood, & Laura Wilkinson, *Online Advertising in the UK*, PLUM CONSULTING (Jan. 2019) at 44, *available at* https://assets.publishing.service.gov.uk/government/uploads/system/uploads/attachment_data/file/777996/Plum_DCMS_Online_Advertising_in_the_UK.pdf

participate, or fixed-price agreements where the advertiser reserves ad space in advance.[17] In the U.K., for example, this kind of advertising accounted for more than 75% of display ads sold programmatically in 2017.[18] *Programmatic indirect* sales, in which the publisher and advertiser do not have a pre-existing relationship, accounted for the remaining quarter. Most of the issues raised by the Texas Complaint, the Omidyar *Roadmap*, and other inquiries into competition in display advertising relate specifically to indirect sales in the programmatic advertising market.

In principle, delivering open-display ads from advertisers to publishers is straightforward: publishers with an inventory of space search out advertisers who want to buy ad space. In practice, it is a complex task to match ads to available space, and to establish a price to place the ad and a price to publish the ad. Each stage in the "adtech stack"—the combination of processes that facilitates these transactions—has evolved to reduce these search and transactions costs.

In the early days of the web, publishers had to deal directly with advertisers or ad agencies to negotiate the terms to host their ads. The fixed costs created by this model meant that it frequently was not viable for smaller sites to rely on advertising as a primary source of revenue. The rise of automated ad placement has reduced these fixed costs over time, significantly expanding the number of publishers able to profit from carrying ads.

These developments—automated auctions of ad space, placement of ads, and user targeting—have enabled publishers to display ads from advertisers without having to deal with them directly; ad intermediaries handle the entire process. For some publishers, the process can be as simple as adding some text to their site's HTML code and setting up an account with an intermediary like Google Adsense; Media.net (run by Yahoo and Bing); PropellerAds; Amazon Native Shopping Ads; or one of the other ad platforms available to smaller publishers (22 in total, by one account).[19]

The ability to track users across websites, and to serve them targeted ads, has meant that the *context* surrounding an ad is now usually less important than the *characteristics of the user* who sees it. For example, instead of seeing ads only for running-related products when she visits a site like runnersworld.com, a new dog owner might also see ads for pet products, based on other websites she has visited. By reducing the importance of the publisher's specific characteristics, targeted advertising allows publishers to sell ad space free from the constraints of their own site's characteristics, allowing their side of the market to become considerably commoditized, but also more valuable overall. Unlike the newspaper and magazine advertising markets, digital publishers' online inventory is relatively homogeneous and interchangeable from the point of view of advertisers.

---

[17] *Id.*

[18] *Id.*

[19] Matteo Dúo, *21 Best AdSense Alternatives to Consider for Your Website in 2021*, KINSTA (Mar. 11, 2020), https://kinsta.com/blog/adsense-alternatives.

Smaller publishers have proliferated, in part, because the lower fixed costs of programmatic advertising have allowed them to generate revenue. These smaller publishers can range in size from local news sites to individual bloggers and "micropublishers," such as YouTubers, Twitch streamers, and social-media "influencers." One potential result of this shift may be the erosion of the advertising revenues once enjoyed by larger publishers, who may once have been many advertisers' only option to reach many consumers.

III. Components of the adtech 'stack'

The combination of software and processes that facilitate digital advertising transactions is known as the "adtech stack." The stack consists of several software components to match advertisers with publishers.

Advertiser ad servers are used by advertisers and media agencies to store ads, deliver them to publishers, track their activity, and assess their effectiveness (by, for example, tracking conversions). *Demand-side platforms* ("DSPs") automate the purchase of advertising inventory by collecting bids in real-time auctions from multiple advertiser ad servers. DSP bids are based on the advertiser's objectives, data about the final user, and data on impressions or conversions. *Publisher ad servers* manage publishers' inventory and determine whether and where to serve a particular ad on a publisher's site. *Supply-side platforms* ("SSPs") automate the sale of publishers' inventory, typically through real-time auctions involving multiple DSPs.

In general, the process of buying and selling digital ads through open-display auctions works as follows (Figure 1):

1. When a user opens a webpage (or uses an app), the publisher's ad server sends a bid request to SSPs for the advertising impressions available on that page for that user.
2. The SSPs send bid requests to multiple DSPs for the ad impressions.
3. DSPs evaluate the advertising opportunity based on user data and the objectives of their advertisers' campaigns and send bids to the SSPs.
4. SSPs rank the bids received based on price and other priorities set by the publisher. The SSPs send their winning bids to the publisher.
5. The publisher ad server compares bids received from SSPs, along with any pre-existing direct deals between the publisher and specific advertisers and decides which ad to serve on the page.

Figure 1: Advertising intermediation and the adtech stack

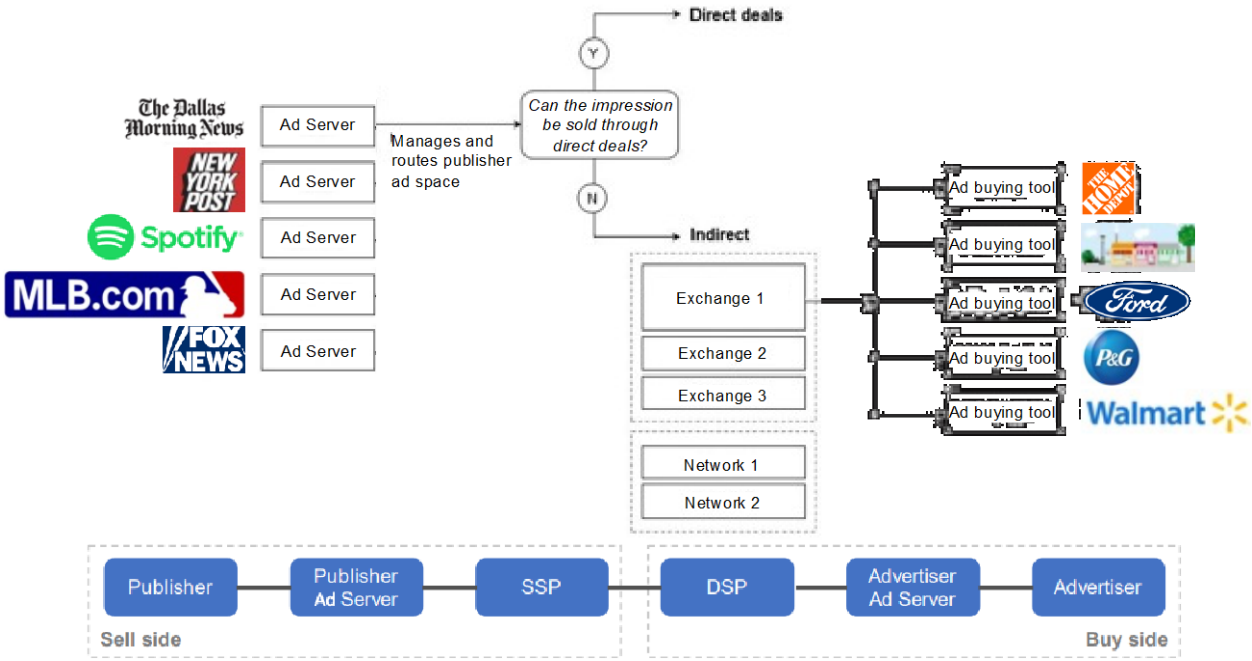

Source: Texas v. Google complaint; CMA

While this process generally applies to most programmatic transactions, there are many variations. For example, there are different ways in which SSPs are contacted and asked to submit their bids. To the extent that a publisher and advertiser have a pre-existing agreement, there are differences in how these arrangements are handled and integrated with deals arranged through automated platforms. The specific approach used to match ads with ad inventory will reflect a balance among different sides of a multisided market. One approach might increase the prices received by sellers (publishers) but expose buyers (advertisers) to increased risk of overpayment. Other methods might reduce risks to advertisers, but also reduce the prices received by publishers.

A key variation came with the emergence, circa 2015, of a technology called header bidding, which allows a publisher to compare bids from multiple SSPs simultaneously.[20] Header bidding, and Google's response to it, has become one of the most important elements of the debate about competition in the display advertising market.[21]

[20] *See, e.g.*, Maciej Zawadziński, *What Is Header Bidding and How Does It Work?*, CLEARCODE (Aug. 10, 2021), https://clearcode.cc/blog/what-is-header-bidding.

[21] *See, e.g.*, Omidyar *Roadmap*, *supra* note 9, at 21.

IV. What is the relevant market and how many are there?

A potential advertiser must make numerous choices about where and how to run ads, including whether to advertise online or via other "offline" media, such as on television or radio, or in newspapers or magazines, among many other options. If it chooses online advertising, it faces another set of alternatives, including:

- Search ads, in which the ad is displayed as a search-engine result (e.g., Google, Bing, DuckDuckGo);
- Display ads on a site owned-and-operated by the firm that sells the ad space (e.g., Facebook, YouTube, Amazon Marketplace);
- "Open" display ads on a third-party's site (e.g., *The New York Times*, *Dallas Morning News*, *Runner's World*);
- Display ads served on mobile apps.

To understand what market power (if any) a company has within the market for a given type of digital advertising (e.g., open display), it is crucial to evaluate what constitutes the *relevant market* in which it operates. If the market is defined broadly to include many kinds of online and/or offline advertising, then even complete dominance of a single segment like open-display ads may not be enough to confer market power. On the other hand, if the relevant market is defined narrowly, it may be easier to reach the legal conclusion that market power exists, even in the absence of economic power over price.

U.S. antitrust regulators have a history of narrowly defining relevant markets, often to the point of absurdity. The Federal Trade Commission (FTC) famously declared that Whole Foods and Wild Oats operated in the "premium natural and organic supermarkets market," a definition that appeared designed to exclude other supermarkets that carry premium natural and organic foods, such as Walmart and Kroger.[22] Similarly, for the Staples/Office Depot merger, the FTC narrowly defined the relevant market as "office superstore" chains, which excluded general merchandisers such as Walmart, K-Mart, and Target which, at the time, accounted for 80% of office-supply sales.[23]

Critics of Google's adtech activities appear to continue this tradition of narrowly defining the relevant market to find market dominance where it may not exist. The Texas Complaint, for example, identifies at least five relevant markets within the (already) narrow definition of open display that it alleges Google is monopolizing or attempting to monopolize:

1. Publisher ad servers for web display;
2. Ad-buying tools for web display;

---

[22] Geoffrey Manne, *Premium natural and organic bulls**t*, TRUTH ON THE MARKET (Jun. 6, 2007), https://truthonthemarket.com/2007/06/06/premium-natural-and-organic-bullst.

[23] W. KIP VISCUSI, JOSEPH E. HARRINGTON, JR. AND DAVID E. M. SAPPINGTON, ECONOMICS OF REGULATION AND ANTITRUST (2005) at 214-15.

3. Ad exchanges for web display;
4. Mediation of in-app ads; and
5. In-app ad networks.

In this section we examine the role of open-display advertising within the broader contexts of marketing, advertising, and digital advertising.

A. Marketing and advertising markets

According to the market research company eMarketer, about $130 billion was spent on digital advertising in the United States in 2019, comprising half of the total U.S. media advertising market (Figure 2).[24] Within digital advertising of all kinds, Google accounted for a little less than one-third of spending in 2020, Facebook accounted for about one-quarter, Amazon for 10%, and other ad services like Microsoft and Verizon accounted for the remaining third.[25] Amazon is currently the fastest-growing online advertising network, with a 52.5% rise in year-on-year revenues in 2020.[26] It is forecast to continue growing ad revenues by 25-30% per year over the next two years.[27] Meanwhile, Google's share has fallen slightly, though it has grown significantly in absolute terms as total digital ad spending has also grown.[28]

[24] In 2020, eMarketer estimates $152 billion was spent on digital advertising in the United States, comprising roughly 63% of the total U.S. media advertising market. eMarketer Editors, *US Digital Ad Spending 2021*, EMARKETER, (Apr.14, 2021), https://www.emarketer.com/content/us-digital-ad-spending-2021.

[25] eMarketer Editors, *Amazon's share of the US digital ad market surpassed 10% in 2020*, EMARKETER, (Apr.6, 2021), https://www.emarketer.com/content/amazon-s-share-of-us-digital-ad-market-surpassed-10-2020.

[26] *Id.*

[27] eMarketer editors, *Amazon will earn over $41 billion in net US digital ad revenues this year*, EMARKETER (Dec. 3, 2020), https://www.emarketer.com/content/amazon-will-earn-over-14-billion-net-us-digital-ad-revenues-this-year.

[28] eMarketer editors, *Google Ad Revenues Drop for the First Time*, EMARKETER (Jul. 23, 2020), https://www.emarketer.com/content/google-ad-revenues-drop-first-time.

Figure 2: U.S. advertising spending, 2019

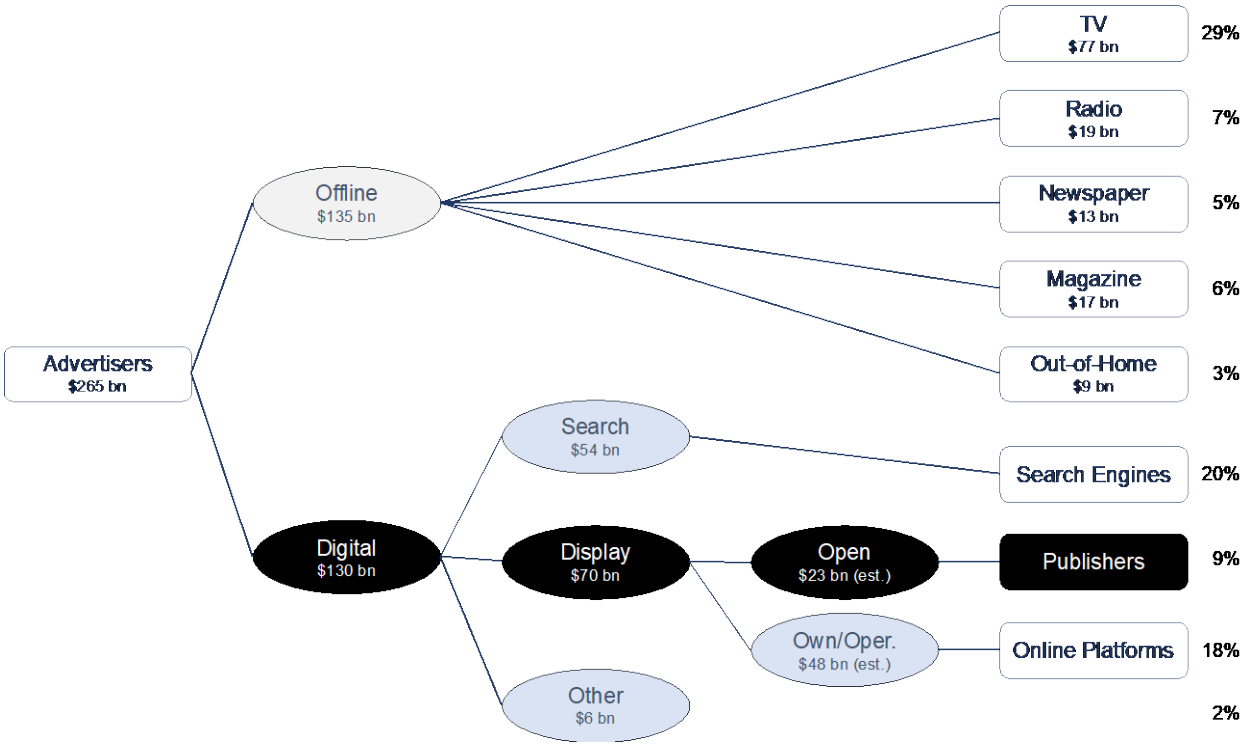

Source: eMarketer; CMA

Digital advertising is just one kind of advertising and advertising more generally is just one piece of a much larger group of *marketing* activities, of which non-advertising marketing communication—such as events, sales promotion, direct marketing, telemarketing, product placement, and merchandising—are an even larger part. Globally, according to Credit Suisse, roughly $500 billion was spent on advertising in 2016 and "at least twice that figure [$1 trillion] on 'below-the-line' marketing," such as direct mail, telemarketing, public relations, event sponsorship, and directories.[29] Industry analyst Benedict Evans likewise estimates about $1 trillion in advertising and marketing spending annually worldwide, with about 55% spent on advertising.[30] Display advertising accounts for about $113 billion of *worldwide* spending on advertising.[31] Much of the broader group of marketing activities outside of digital advertising have not yet been disrupted by the Internet. But among those that have been, "many marketers may view advertising as a substitute for many different approaches to

[29] Omar Sheikh, at al., *The Future of Advertising*, Credit Suisse Connections Series (Apr. 25, 2017) at 9, *available at* https://plus.credit-suisse.com/rpc4/ravDocView?docid=V6BqP32AF-WErKbi.

[30] Benedict Evans, *The End of the Beginning*, A16Z (Nov. 16, 2018), https://www.youtube.com/watch?v=RF5VIwDYIJk&t=217s&ab_channel=a16z ("If you go globally . . . just advertising and marketing in total is now close to a trillion dollars.").

[31] *U.S. Digital and Programmatic Market*, PubMatic 2020 Global Digital Ad Trends (Dec. 2019), *available at* https://pubmatic.com/wp-content/uploads/2019/12/2020-Global-Digital-Ad-Trends.pdf.

marketing communications."[32] Of the $1 trillion or more in global marketing activities, Internet advertising *in total* occupies only about 18%,[33] and thus display advertising around 10%.

Advertising occurs across a wide range of media, including television, radio, newspapers, magazines, trade publications, billboards, and the Internet. Digital advertising takes numerous forms, such as ads presented along with search results, static and video display ads, in-game ads, and ads presented in music streams and podcasts. As shown in Figure 3, total advertising spending in the United States has increased by about 15% since 2009.[34] But as a share of the economy, ad spending has been relatively flat, at slightly less than 1% of GDP.[35]

Figure 3: U.S. advertising spending over time

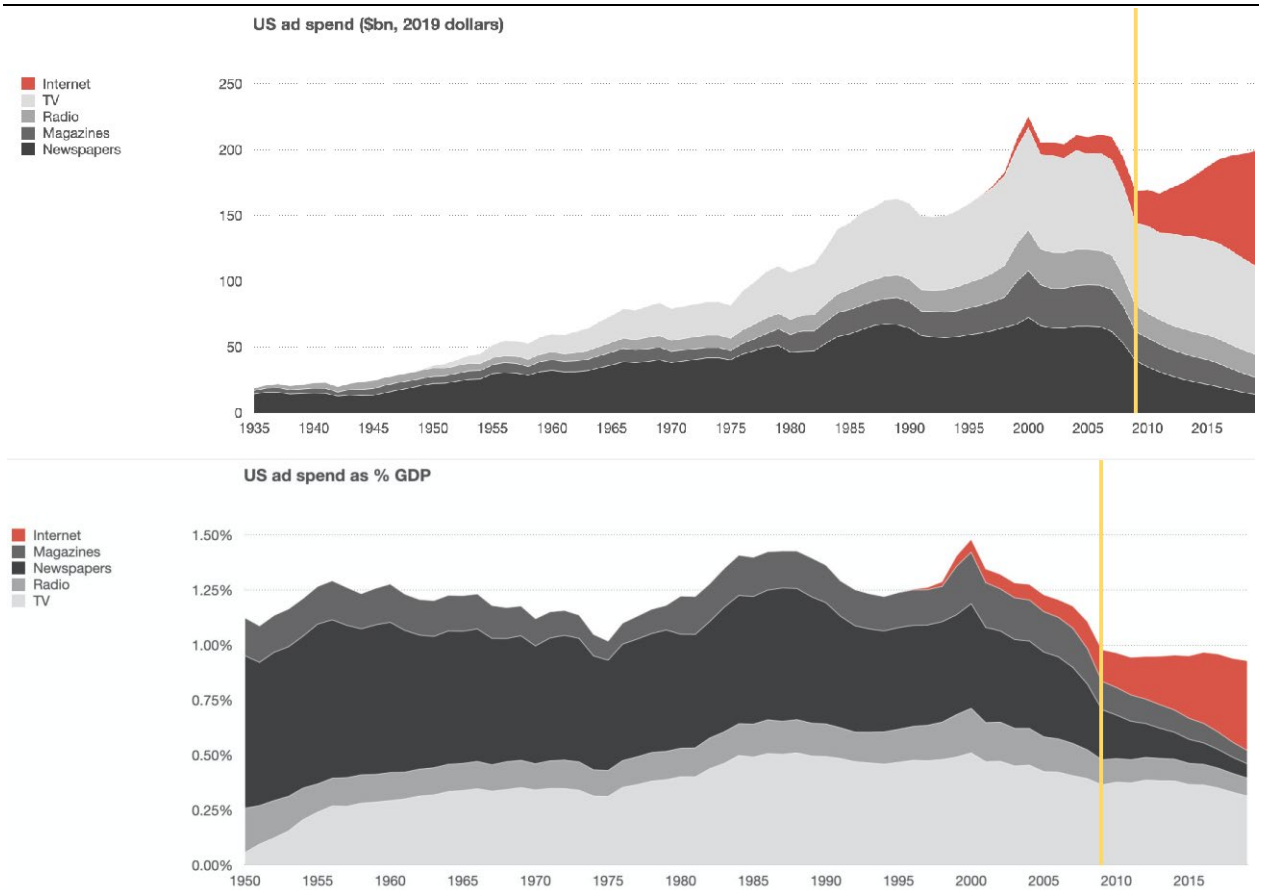

Source: Benedict Evans

[32] Tucker, *supra* note 12, at 696.

[33] Evans, *The End of the Beginning*, *supra* note 30.

[34] Benedict Evans, *News by the Ton: 75 Years of US Advertising* (Jun. 15, 2020), https://www.ben-evans.com/benedictevans/2020/6/14/75-years-of-us-advertising.

[35] *Id.*

Digital advertising, of which display advertising is a small part, is only one of many channels through which companies can market their products. About half of total advertising spending in the United States goes to digital channels, up from approximately 10% a decade ago. Approximately 30% of ad spending goes to TV and less than one-quarter goes to radio, newspapers, magazines, billboards, and other "offline" forms of media (Figure 2).

Physical newspapers account for about 5% of total advertising spending (Figure 2). As Internet usage increased, newspaper classifieds have been replaced by less costly and more effective Internet classifieds, such as those offered by Craigslist; and by websites whose services have displaced entire categories previously served by classifieds, such as real estate, dating, and job listings.[36]

According to Pew Research Center, American newspapers' total ad revenues (including ads on their websites) reached $49 billion in 2006, after which they fell rapidly to an estimated $9 billion in 2020.[37] These declining revenues have been partially driven by a fall in physical newspaper circulation, which has dropped by more than half since 2006, and by about 60% since its height in the late 1980s. That decline has been somewhat offset by a rise in digital circulation, which is hard to measure, since only a few newspapers publish data about online readership. According to Pew, if the digital circulation of *The New York Times*, *Wall Street Journal*, and *Washington Post*—three of the largest U.S. newspapers—were to be added to physical circulation data, weekday circulation may have actually increased in recent years.

Figure 4: Share of U.S. advertising spending, by media type

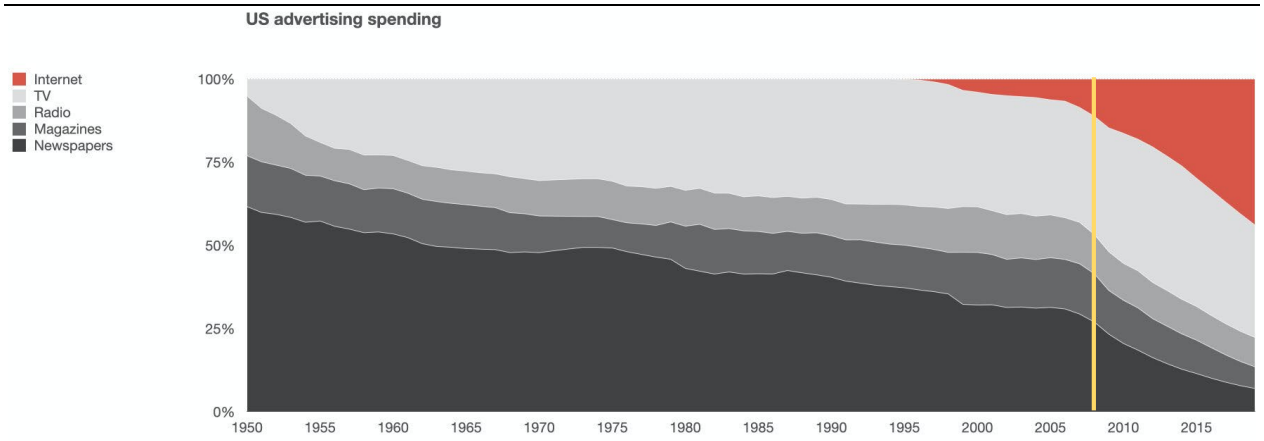

Source: Benedict Evans

[36] Robert Seamans and Feng Zhu, *Responses to Entry in Multi-Sided Markets: The Impact of Craigslist on Local Newspapers*, 60 MANAGEMENT SCI. 476, 490 (2014) (effect of Craigslist's entry on newspapers leads to a decrease in classified and display ad rates, an increase in subscription prices, and a decrease in circulation).

[37] Michael Barthel & Kirsten Worden, *Newspaper Fact Sheet*, PEW RESEARCH CENTER (Jun. 29, 2021), https://www.journalism.org/fact-sheet/newspapers.

Display advertising accounts for a little more than half of all digital advertising spending in the U.S. Much of this involves *owned-and-operated* publisher inventory—space that is owned by the party that intermediates the ad sale, such as YouTube, Facebook, and Instagram. *Open*-display advertising on third-party websites is a small subset of total digital advertising. The CMA estimates it accounts for approximately 30-35% of display advertising spending, including social-media advertising, and 13% of total digital advertising spending in the U.K., while eMarketer estimates that it accounts for about 18% of U.S. digital-advertising spending.[38]

Over the past decade, the price of advertising has fallen steadily, while output has risen. Spending on digital advertising in the U.S. grew from $26 billion in 2010 to $152 billion in 2020, an average increase of 19% a year.[39] Over the same period the Producer Price Index for Internet advertising sales declined by an average of 5% per year.[40] The rise in spending in the face of falling prices indicates the number of ads bought and sold increased by approximately 26% a year. The combination of increasing quantity, decreasing cost, and increasing total revenues are consistent with a growing and increasingly competitive market, rather than one of rising concentration and reduced competition.

B. Competition across advertising channels

As in other markets marked by rapid technological change, firms competing in the markets for marketing and advertising communication must respond to (and anticipate) shifting technologies, changing consumer demand, and new business models. As they do so, superficial differences among these markets and market segments often become less significant to defining the scope and nature of competition. As noted by economists Thomas Jorde and David Teece, competition in these kinds of markets often comes from the future:

> It is especially in assessing potential competition that a departure must be made from orthodox approaches when new technologies and new products are at issue. The reason is that potential competition from new technologies can destroy a firm's position in a particular market and its underlying competences. Price competition, on the other hand, may erode profit margins but is less likely to completely destroy the value of a firm's underlying technological, physical, and human assets. Accordingly, potential competition from new products and processes is the more powerful form of competition.[41]

---

[38] CMA, *supra* note 4, at 10 & 246.

[39] IAB and PwC, *IAB Internet Advertising Revenue Report, 2010 Full Year Results* (Apr., 2011), *available at* https://www.iab.com/wp-content/uploads/2015/05/IAB_Full_year_2010_0413_Final.pdf; Nicole Perrin, *US Digital Ad Spending 2021*, EMARKETER (Apr. 14, 2021), https://www.emarketer.com/content/us-digital-ad-spending-2021.

[40] US Bureau of Labor Statistics, Producer Price Index, December 2009—February 2021, https://fred.stlouisfed.org/graph/?g=vtTd.

[41] Thomas M. Jorde & David J. Teece, *Innovation, Dynamic Competition, and Antitrust Policy*, 13 REGULATION 35, 37-38 (1990).

That television broadcasters and cable networks compete with digital services is well-understood.[42] And they do so on virtually all dimensions: for user attention, for labor, for content and other inputs—and for advertising. The same is true for competition among both television/cable and digital platforms and newspapers, radio, magazines, video games, music streaming, and podcasts.

Nevertheless, antitrust regulators will routinely separate these markets in the context of competition analysis and enforcement decisions, based on superficial differences between them. So it is that such analysis frequently distinguishes television vs. online search, online vs. offline commerce, search vs. social media, or newspapers vs. blogs. It is questionable whether such distinctions remain meaningful.[43] Indeed, as competition law professor Pinar Akman concludes, the economic reality is that competition—especially in innovative or dynamic markets—is not confined by these superficial distinctions:

> [M]arket definition is an entirely artificial construct that has been called an incoherent process as a matter of basic economic principles. Real markets do not come defined. Market definition is an exercise that serves to establish the group of products that are sufficiently substitutable with one another.[44]

The economic question is whether one set of products or services acts as a competitive constraint on another—not whether they appear to be descriptively similar. As economist Greg Werden concludes, "[a]lleging the relevant market in an antitrust case does not merely identify the portion of the economy most directly affected by the challenged conduct; *it identifies the competitive process alleged to be harmed*."[45] An accurate market definition that reflects competitive reality is necessary to determine "what the nature of [the relevant] products is, how they are priced and on what terms they are sold, what levers [a firm] can use to increase its profits, and what competitive constraints affect its ability to do so."[46]

---

[42] Michael Schneider and Kate Aurthur, *R.I.P. Cable TV: Why Hollywood Is Slowly Killing Its Biggest Moneymaker*, VARIETY (Jul. 21, 2020), https://variety.com/2020/tv/news/cable-tv-decline-streaming-cord-cutting-1234710007 ("[B]asic cable feasted on a dual revenue stream of subscriber fees and advertising revenue. But that gravy train started going off the rails when the streaming services arrived.").

[43] Tucker, *supra* note 12, at 688 ("Ultimately, an advertiser is indifferent between whether it is a video ad, or a static text-laden ad that influences a customer to purchase as long as they can measure how effective that format was relative to its price.").

[44] Pinar Akman, *The Theory of Abuse in Google Search: A Positive and Normative Assessment Under EU Competition Law*, 2017 J. L. TECH. & POL'Y 301, 369 (2017) (*citing* Louis Kaplow, *Why (Ever) Define Markets*, 124 HARV. L. REV. 437 (2010)).

[45] Greg Werden, *Why (Ever) Define Markets? An Answer to Professor Kaplow*, 78 ANTITRUST L.J. 729, 741 (2013) (emphasis added).

[46] Geoffrey A. Manne, *In Defence of the Supreme Court's 'Single Market' Definition In* Ohio v. American Express, 7 J. ANTITRUST ENFORCEMENT 104, 106 (2019). *See also Ohio v. Am. Express Co.*, 138 S. Ct. 2274, 2287 (2018) ("Evaluating both sides of a two-sided transaction platform is also necessary to accurately assess competition.").

Crucial to properly defining the scope of the advertising market is understanding that substitutable products, or services provided through different channels of distribution, are not necessarily in different markets. Oranges are sold in supermarkets and natural-food stores, as well as at produce stands. But this distinction does not mean that oranges sold at one outlet may be priced without regard to pricing of the other outlets.

Of course, it's complicated. Some consumers may not have access to all distribution channels. And the distinction between a distribution channel and a product's characteristics is not always a bright line: for some, the experience of shopping at a fruit stand may be so meaningfully different than that of shopping at a grocery store that otherwise identical products are less substitutable because of the way they are sold. Further, some products that are imperfect substitutes may be distributed in different ways that correspond to those differences, such that the channel of distribution is at least a proxy for relevant qualitative differences.

But while the matter is complicated, several conclusions are widely accepted as they pertain to advertising:

1. **The primary (though not sole) concern of advertisers is reaching the right audience**. There are myriad mechanisms to accomplish this and, to varying degrees, all are substitutes for the others. All target audiences "multi-home" across distribution channels to a considerable extent. While it likely makes little sense to advertise to fly fishermen by placing ads in a computer game played largely by teenagers, it may make sense to try to reach them by advertising on, say, both broadcast television and social media.
1. **For many advertisers and types of advertising, the right audience can be—and even must be—reached through multiple means**. On the one hand, this is because targeting remains imperfect (to say the least), and wide distribution will often be required. On the other hand, an increased ability to measure advertising impact enables marketers to free themselves from the constraints of limited targeting, ensuring that varied forms of distribution will not be wasteful.
2. **Measurement is crucial in guiding marketing decisions**. Advertisers are concerned about the return on their investment in advertising dollars. When measurement was more difficult, budget-constrained marketers unable to identify the effectiveness of ad spending were far more constrained in their ability to cost-effectively target. With digital advertising, it is much easier and less costly to evaluate the effectiveness of specific ads. As economist Catherine Tucker notes, today "it does not matter where the consumer saw [an] ad or whether [an] ad was intended to provoke awareness, consideration, or purchase. What matters is the relative return on advertising spend of that ad placement."[47]
3. **For these and other reasons *television* competes with the *Internet*** (as well as with print media, radio, and others) to sell advertising inventory, intermediary ad services, targeting, and the like, even though a particular website and a particular television program may not compete head-to-head.

[47] Tucker, *supra* note 12, at 685-86.

4. To be sure, different types of advertising (and marketing more broadly) may still be better suited for different types of distribution. **But even where those channels of distribution may not be direct substitutes, they may be complements**. Understanding the competitive process entails taking account of that interrelatedness.[48]

Economists James Ratliff and Dan Rubinfeld summarize these factors:

> The relevant question is: Would enough… advertisers shift advertising volume from [one channel to another] to defeat the profitability of an across-the-board price increase…? We argue that, because advertisers ultimately are purchasing sales, many types of advertising with varied characteristics can nevertheless compete with each other on price.[49]

This is a valid (and still poorly understood) question. Economist Joel Waldfogel raised the question nearly two decades ago in a study prepared for the U.S. Federal Communications Commission (FCC):

> Researchers and policy makers have devoted significant attention to whether advertising in one medium is a substitute for advertising in another, but there [is] little research (to my knowledge) on whether information provided through one medium serves as a substitute for information provided through another. The question is important. If consumers substitute information across media, then the market for information may extend across media, raising questions about regulation of outlets within media.[50]

The CMA provides a partial answer to these questions:

> Facebook submitted that advertisers switch their spend between channels to maximise their ROI and continue to do so until the ROI of the marginal unit of advertising is equal across channels. Facebook also stated that there are businesses and services (e.g., DSPs, Trading Desks) that help advertisers reallocate spend across various online and offline advertising channels.[51]

But in the broad category of advertising and marketing, there can be no doubt that multiple broadcast channels compete for relatively scarce advertising dollars, and that marketers combine different forms of advertising in different amounts across channels—in part, based on price differences. A focus on branding and a focus on sales conversion differ only as a matter of degree. *Both* are forms

---

[48] *See* James D. Ratliff & Daniel L. Rubinfeld, *Online Advertising: Defining Relevant Markets*, 6 J. COMPETITION L. & ECON. 653 (2010), manuscript at 9, *available at* https://papers.ssrn.com/sol3/papers.cfm?abstract_id=1734015) ("In defining advertising markets, it is essential to account for the prospect that two or more media may offer complementary benefits, whether or not they are economic substitutes.").

[49] *Id.* at 21. See also Tucker, *supra* note 12.

[50] *See* Joel Waldfogel, *Consumer Substitution among Media*, Federal Communications Commission Media Ownership Working Group (2002), at 7, *available at* http://citeseerx.ist.psu.edu/viewdoc/download?doi=10.1.1.159.5081&rep=rep1&type=pdf.

[51] CMA Final Report, *supra* note 4, at n. 375.

of reducing the costs of search, identified by economist George Stigler in the 1960s as one of advertising's defining functions.[52]

C. Online vs. offline advertising

The fact that offline and online advertising—to say nothing of marketing more broadly—employ distinct processes does not consign them to separate markets. Indeed, online advertising has manifestly drawn advertisers from offline markets, as previous technological innovations drew advertisers from other channels before them.[53] Moreover, while there is evidence that, in some cases, offline and online advertising may be complements (as well as substitutes),[54] the distinction between these is becoming less and less meaningful as the revolution in measurability has changed how marketers approach different levels of what is known as the marketing "funnel."[55]

That consumers seem to treat these mediums of information and entertainment as at least partial substitutes for one another does not necessarily mean that advertisers see them the same way. But the inverse trend lines of advertising spending between, say, the Internet and television suggests that they do. If the same or similar consumers are variously to be found in each channel, all else being equal, there is every reason to expect advertisers to substitute between them, as well. As one study concludes:

> The results show substitution and complementary patterns across certain media outlets. An increase in price for advertising in radio, for instance, leads to higher demand for newspapers and outdoors. Similarly, complementarity relationships between media outlets are observed, suggesting that advertising across the various media platforms is, overall, interwoven.[56]

Of course, digital platforms like Facebook and Google generate substantial advertising revenues. But the market in which they operate is broader than "digital advertising." For example, while the mix of advertising has shifted, TV advertising remains significant. There is reason to believe that TV advertising budgets are, at least in part, complementary to Internet advertising budgets, such that

---

[52] *See* George J. Stigler, *The Economics of Information*, 69 J. POL. ECON. 213, 220 (1961) ("Advertising is, among other things, an immensely powerful… instrument for the elimination of ignorance.").

[53] At the same time, as Benedict Evans notes, not all digital advertising is drawn from offline sources: "[I]f you talk to people at both Google and Facebook and in the agency world, you'll hear that a lot of the money spent on Google and Facebook is money that was never spent on traditional advertising—it's coming from SMEs [small and medium enterprises] and local businesses that *might* have spent in classified at most but probably wouldn't have done even that." Evans, *News by the Ton*, *supra* note 34 (emphasis in original).

[54] *See* Xi He, Rigoberto Lopez & Yizao Liu, *Are Online and Offline Advertising Substitutes or Complements? Evidence from U.S. Food Industries*, 15 J. AGRICULTURAL & FOOD INDUS. ORG. 1 (2017).

[55] Tucker, *supra* note 12, at 685-88.

[56] David Bardey, Jorge Tovar & Nicolas Santos, *Characterization of the relevant market in the media industry: some new evidence!*, Toulouse School of Economics Working Paper 16-719 (2016), *available at* https://www.tse-fr.eu/publications/characterization-relevant-market-media-industry-some-new-evidence.

part of the increase in TV advertising is actually driven by Internet advertising, even as the two are also often substitutes, such that some ad spending has surely shifted from television to the Internet.

What is clear, however, is that offline and online advertising are both constituent parts of the same strategic approach to marketing:

> [T]he trend in the business world is to view these different channels as part of what is referred to as integrated marketing. In such an approach, the advertisers use multiple advertising channels, public relations, promotions, and sponsorship tools to reach deeply fragmented audiences with different demographics multiple times for any campaign.[57]

What publishers sell to advertisers is access to consumers' attention. While there is no dearth of advertising space, consumer attention is a finite and limited resource. Television, of course, has historically been enormously successful at attracting a large share of consumers' time away from competing sources of entertainment or information. Today's Internet is just as successful in attracting consumers' attention, including some of it from traditional television. Both channels remain significant for advertising, and current advertising spending appears to reflect the relative success of each.

There is little research to show conclusively the extent of advertiser substitution between alternative channels of distribution. But economist David Evans' review of the literature points to a broader advertising market than is alleged in the Texas Complaint or the Omidyar *Roadmap*:

> Existing work together with anecdotal information suggest that advertisers—and their agents—determine an overall advertising budget, allocate that budget among different methods (such as brand advertising on national television) for achieving the objectives of an advertising campaign, and then select advertising outlets for spending their dollars.... Advertisers base decisions about the level and allocation of their budgets on formal or informal analyses of the rate of return on investment. For these ad campaigns, the different advertising methods can be substitutes to the extent they provide alternative ways of delivering messages to an audience, and complements to the extent they can reinforce each other.[58]

While there is considerable evidence to suggest that consumers are not, for the most part, substituting Internet time for television time (but rather are maintaining or even increasing television consumption and making time for the Internet by diverting their scarce attention from elsewhere),[59] the

---

[57] Spencer Weber Waller, *Antitrust and Social Networking*, 90 N.C. L. REV. 1771, 1782 (2012).

[58] David S. Evans, *The Online Advertising Industry: Economics, Evolution, and Privacy*, 23 J. ECON. PERSP. 37, 49 (2009).

[59] *See id.*, at 53 ("Thus far, consumers appear to have substituted away from radio and newspaper content, but not television content. Persons above 12 years of age spend 32 percent more time watching cable and satellite television than they did in 2001. The usage of radio and traditional newspapers has declined by 3 and 15 percent, respectively (U.S. Census Bureau, 2009, table 1089).").

same cannot be said for advertisers, who appear to view television and Internet advertising as close substitutes, and have embraced the latter at the expense of the former.

For example, economists Avi Goldfarb and Catherine Tucker demonstrate that display advertising pricing is sensitive to the availability of offline alternatives.[60] Firms have limited advertising budgets, and they distribute them across a broad range of media and promotional efforts, seeking the highest return on investment (ROI). Given historical trends and rates of advertising spending across channels, both online and offline, it would be surprising if companies did not adjust their marginal spending among channels in response to price (and quality) changes.

Although advertising technology and both supplier and consumer preferences continue to evolve, the weight of evidence suggests a far more unified and integrated *economically relevant* market between offline and online advertising than their common *semantic* separation would suggest:

> We believe our studies refute the hypothesis that online and offline advertising markets operate independently and suggest a default position of substitution. Online and offline advertising markets appear to be closely related. That said, it is important not to draw any firm conclusions based on historical behavior.[61]

D. Display vs. search advertising

In its review of the Google/DoubleClick merger in 2017, the FTC identified separate markets for search and display advertising:

> Advertisers purchase different types of ad inventory for different purposes, and one type does not significantly constrain the pricing of another. For instance, advertisers primarily purchase search advertising space to implement direct response ad campaigns, while directly sold ad inventory is generally purchased for brand advertising campaigns.[62]

Whether or not this was accurate at the time, it is almost certainly too narrow today. The longstanding notion of the "marketing funnel" is rapidly becoming outdated. As the ability to measure ad effectiveness has increased, distinctions among types of advertising dictated by where the ad would fall in the marketing funnel have disappeared. Today,

> advertisers can effectively use any format at any place in the funnel and evaluate whether it is effective for that particular target audience. Ultimately, an advertiser is indifferent

---

[60] Avi Goldfarb & Catherine Tucker, *Search Engine Advertising: Channel Substitution When Pricing Ads to Context*, 57 MANAGEMENT SCI. 458 (2011) (determining the price of "ambulance chaser" lawyer ads was significantly more expensive in states prohibiting direct mail solicitation by attorneys and concluding that "online advertising substitutes for online advertising").

[61] Avi Goldfarb & Catherine Tucker, *Substitution Between Offline and Online Advertising Markets*, 7 J. COMPETITION L. & ECON. 37, 43 (2011).

[62] *Statement of the Federal Trade Commission Concerning Google/Doubleclick*, FTC File No. 071-0170 (Dec. 20, 2017) at 7, *available at* https://www.ftc.gov/system/files/documents/public_statements/418081/071220googledc-commstmt.pdf.

> between whether it is a video ad, or a static text-laden ad that influences a customer to purchase as long as they can measure how effective that format was relative to its price.[63]

This raises the question whether online *display* advertising constitutes a distinct, economically relevant market from online *search* advertising.

The goal of most advertising is ultimately to get people to do something. "Getting people to do something" takes many different forms. On the one hand, "brand building" ads can inform consumers about a product's features, such as its price, quality, or even its mere existence. On the other hand, "calls to action" attempt to prompt consumers to take an action: to buy a product, donate to a cause, or vote for a particular candidate.

Credit Suisse estimates that, in 2016, across the entire U.S. economy, around twice as much was spent on calls to action (66% of total spending on marketing) as was spent on brand building (34%). The investment firm further estimates that similar fractions will continue to be spent through 2030.[64] Looking specifically at online marketing, the company estimated that, as of 2016, 90% of marketing spending was on calls to action and 10% on brand building. However, it predicted that, by 2030, the proportion spent on brand building would rise to 33%, in line with other forms of advertising.

There is a widespread belief that the distinction between brand building and calls to action is important to digital advertising.[65] In particular, it is often said that search ads are used for calls to action, while display ads are typically used for brand building. If a homeowner's pipe bursts in the middle of the night, for example, she would use a search engine—such as Google, Bing, or DuckDuckGo—to search for "24-hour plumbers." A relevant search ad could prompt the homeowner to call one plumber rather than another. In contrast, the Omidyar *Roadmap* describes the role of display ads in building brand awareness, in which case the ad does not lead to immediate action:

> A user reading a review of new running shoes on runnersworld.com, a magazine for runners, might see ads for running shoes on the sensible assumption that she is planning to buy new shoes. While reading, she might also see display ads on the side of her screen for running socks, or energy drinks, or other products that advertisers might hope she is interested in based both on her interest in running and also on what they know about her age, gender, and income, for example.[66]

---

[63] Tucker, *supra* note 12, at 688.

[64] Omar Sheikh, et al., *supra* note 29, at 35.

[65] For example, the CMA Final Report, *supra* at note 4, reports that advertising agencies "told us that search and display advertising are not substitutable, mainly because they perform different roles within the customer purchase journey." Appendix N at ¶ 67.

[66] Omidyar *Roadmap*, *supra* note 9, at 4.

Many observers—including the CMA in its digital-advertising market study—describe the structure of the advertising market as a "funnel."[67] The classic marketing funnel begins with brand-building-type advertising at the top, aimed at a wide audience and intended to promote awareness of a product or brand. This is followed by increasingly targeted advertising that aims to give would-be customers a more and more favorable view of the product. At the bottom of this funnel is an advertisement that leads the customer to purchase the item. In this conception, search and display advertising are entirely distinct:

> Search is primarily intent-based advertising designed to provide immediate answers to consumers who have already shown interest in buying the product and are at the end of the purchase funnel ('in-market consumers'), whereas display is suitable for raising brand awareness and reaching new audiences that might not yet have shown interest ('out-of-market consumers').[68]

In practice, however, this line between online advertising formats has become increasingly blurred, with many ads serving both functions.[69] For example, economist Preston McAfee describes a continuum of online advertising that lies between extremes of brand building and calls to action. On one end is the shampoo advertiser whose main aim is to improve perceptions of its brand, such that someone seeing the ad will be more likely to later purchase the shampoo in a store (few people currently buy shampoo online). For these advertisers, impressions (or views) of their ads are the most valuable metric. At the other extreme, McAfee describes malware distributors, who "get nothing unless you click on their ad, in which case they install a rootkit in your computer."[70] In between these extremes are a vast number of manufacturers, retailers, and service providers whose digitals ads both hope to improve their brand's perception and also offer a direct link to purchase the product online.

In these cases, both impressions and clicks are valuable, albeit to differing degrees. A click-through leading to an immediate purchase may be ideal, but the advertiser may benefit even if the online ad only makes the consumer somewhat more likely to later buy the advertiser's product offline. In-feed display ads on social media sites like Instagram and Facebook often exhibit this dual nature.

The sort of analysis that has thus far supported claims of distinct online advertising markets is unconvincing and anecdotal. In its review of the Google/DoubleClick merger in 2007, for example,

---

[67] CMA Final Report, *supra* at note 4, at 216, Figure 5.1.

[68] *Id.*, at 218. *See also Id.* at Appendix N at ¶ 67.

[69] Indeed, even the CMA Final Report acknowledges this. *See Id.* at Appendix N at ¶¶ 67-76 ("Some respondents noted that the distinction was not absolute in all cases, in that search can also sometimes be used as an upper funnel to build brands, and display can sometimes be an effective sales driver.").

[70] *Competition in Television and Digital Advertising*, Transcript of Proceedings at the Public Workshop Held by the Antitrust Division of the United States Department of Justice (May 2-3, 2019) at 51, *available at* https://www.justice.gov/atr/page/file/1202076/download.

the FTC asserted that search and non-search advertising were different markets: "Thus, search engines provide a unique opportunity for advertisers to reach potential customers. Advertisers view online content providers differently."[71] But the FTC's argument in support of this claim rests on the existence of the sort of superficial product differences that neglect the markets' competitive dynamics, instead resting heavily on semantic familiarity and ready observability. As economists James Ratliff and Daniel Rubinfeld have noted:

> Based on the publicly available evidence cited by the FTC, *their conclusion that search and non-search do not compete is not compelling*. In its essence, the FTC is suggesting that the two classes of ads do not compete because they have different characteristics and in particular are differentially targeted. However, the ultimate market definition question depends on whether the two products are sufficiently close economic substitutes so that each constrains the pricing of the other. This central question remains unanswered.[72]

While the EU's decision in Google/DoubleClick indicated that online and offline advertising were not in the same relevant market, it left open the likelihood that search and display ads occupy the same relevant market. The EU's decision argued that it is indeterminate whether search and non-search advertising are in the same market, noting that "[i]t can, therefore, be inferred that, from an advertiser's point of view search and non-search ads can be considered substitutable to a certain extent."[73] In neither case were such market definitions the product of an economic analysis of the substitutability of the products.

Meanwhile, other anecdotal evidence cuts the other direction:

> One survey of 200 online retailers found that "online advertisers do in fact perceive the three channels of online advertising [search, display and contextual] as substitutes." Among other things, the survey found that "[i]n weighted terms, respondents representing 83 percent of all ad spending view graphic ads and search ads as substitutes." At least one court has likewise determined that all forms of at least online advertising are in the same relevant market for antitrust analysis.[74]

Various forms of targeted online advertising compete with each other. Firms spread their marketing budgets across these different sources of online marketing, and search-engine optimizers—that is,

---

[71] Fed. Trade Comm'n, *Statement Concerning Google/DoubleClick*, FTC File No. 071-0170, at 3 (Dec. 20, 2007), *available at* https://www.ftc.gov/system/files/documents/public_statements/418081/071220googledc-commstmt.pdf.

[72] Ratliff & Rubinfeld, *supra* note 48, at 17 (emphasis added).

[73] Case COMP/M.4731 Google/DoubleClick, 11 March 2008, ¶ 53.

[74] Geoffrey A. Manne & Joshua D. Wright, *Google and the Limits of Antitrust: The Case Against the Case Against Google*, 34 HARV. J. L. & PUB. POL'Y. 1, 26-27 (2011) (*citing, inter alia*, KinderStart.com LLC v. Google, Inc., No. C06-2057JF(RS); 2007 WL 831806 at *6 (N.D. Cal. Mar. 16, 2007) (noting that "there is no logical basis for distinguishing the Search Ad Market from the larger market for Internet advertising").

firms that help websites to maximize the likelihood of a valuable "top-of-list" organic search placement—attract significant revenue.[75] At root, all these channels vie against each other for consumer attention. They offer advertisers the ability to target their advertising based on data gleaned from consumers' interactions with their platforms.

Meanwhile, new mechanisms to attract consumers' attention and to match advertisers with consumers may siphon the most valuable advertising from existing sources. Most obviously, Facebook built a business on par with Google's by taking advantage of users' more extended engagement with the platform to assess relevance, and by enabling richer, more-engaged advertising than previously appeared on Google Search. It is a different model from search, but one that has turned Facebook into a comparable ad platform.[76] Twitter, Snapchat, Pinterest, Yelp, and Amazon's ads business (among many others) also compete for eyeballs and advertising revenue, each employing different models to connect users with the most relevant and most valuable advertising. While all of these offer different ways to reach users, it is far from clear that they all operate in distinct markets.

Indeed, for all the claims that Google and Facebook constitute an unassailable online advertising "duopoly," no such position has ever actually been truly "unassailable," least of all in online and high-tech markets. Not only is there intense competition between the two, but "smaller" players are increasingly drawing advertising dollars away:

> There's no one competitor snapping up the spending. Smaller players like Amazon and Snapchat are growing faster than expected, with Amazon singled out by industry leaders as the next big force in advertising.... Snapchat, which is expected to capture 82% more in ad spending than it did last year, is also projected to cross the $1 billion mark in 2018.[77]

Somewhere between 37% and 56% of product searches start on Amazon, according to one survey,[78] which ought not be surprising, given the platform's ability to match consumers with advertisements, and to do so when and where consumers are surely more likely to make a purchase. Advertisers have noticed.[79] It is impossible to say, without further analysis, just how interchangeable these forms of

---

[75] *See, e.g.*, Bo Xing & Zhanghi Lin, *The Impact of Search Optimization on Online Advertising Market*, *in* ICEC 2006 PROCEEDINGS OF 8TH INTERNATIONAL CONFERENCE ON ELECTRONIC COMMERCE 519 (2006).

[76] *See* Haley Tsukayama, *Why Facebook Is Delivering Great Earnings When Other Big Tech Companies Are Not*, THE WASH. POST (Apr. 27, 2016), https://www.washingtonpost.com/news/the-switch/wp/2016/04/27/facebook-is-delivering-great-earnings-when-other-big-tech-companies-are-not.

[77] Ashley Rodriguez, *Google and Facebook Are Losing Their Locks on Digital Advertising*, QUARTZ (Mar. 19, 2018), https://qz.com/1232444/google-and-facebooks-digital-ad-lock-is-in-jeopardy.

[78] eMarketer Editors, *Do Most Searches Really Start on Amazon?*, EMARKETER (Jan. 7, 2020), https://www.emarketer.com/content/do-most-searchers-really-start-on-amazon.

[79] Jeanine Poggi, *Google-Facebook Duopoly Set to Lose Some of Its Share of Ad Spend*, ADAGE (Feb. 20, 2019), https://adage.com/article/digital/duopoly-loses-share-ad-spend/316692 (noting that Amazon will more than double its share).

advertising are for advertisers, but in many cases they may be significantly so—and assumptions to the contrary are poorly (if at all) supported.

E. Open vs. owned-and-operated display advertising

Like many other analyses, the CMA Final Report identifies two distinct channels of display advertising, which it describes as "owned and operated" and "open":

> Over half of display expenditure is generated by Facebook, which owns both the Facebook platform and Instagram. YouTube has the second highest share of display advertising and is owned by Google. The open display market, in which advertisers buy inventory from many publishers of smaller scale (for example, newspapers and app providers) comprises around 32% of display expenditure.[80]

The CMA contends the *owned-and-operated* channel is comprised largely of large social-media platforms, which sell their own advertising inventory directly to advertisers or media agencies through self-service interfaces, such as Facebook Ads Manager or Snapchat Ads Manager.[81] In contrast, in the *open* display channel, publishers such as online newspapers and blogs sell their inventory to advertisers through a "complex chain of intermediaries."[82] Through these, intermediaries run auctions matching advertisers' ads to publisher inventory of ad space. In both channels, nearly all transactions are run through programmatic technology.

The CMA concludes that advertisers "largely see" the two channels as substitutes.[83] The Final Report indicated that an advertiser's choice of one channel over the other is driven by the channel's ability to meet the advertiser's key performance indicators relating to the outcomes the advertising campaign is intended to achieve.[84]

By contrast—and ignoring the CMA's findings—the Texas Complaint defines the "open web" as "websites whose inventory is available via an exchange or network,"[85] and claims that such advertising is not a substitute for social-media and in-app advertising.[86] More broadly, the Complaint adopts a non-economic approach to market definition, defining the relevant market according to similarity

---

[80] CMA Final Report, *supra* at note 4, at ¶ 5.8.

[81] *Id.* at ¶ 2.49.

[82] *Id.* at ¶ 2.50.

[83] *Id.* at ¶ 5.23.

[84] *Id.*

[85] Texas Complaint at ¶ 165.

[86] Texas Complaint at ¶ 175 ("non-interchageability of social media advertising with open web display advertising") & ¶ 172 ("web display ad inventory and in-app display ad inventory are generally not substitutes for small advertisers").

between product functions, not by economic substitutability.[87] It thus ignores the potential substitutability between different kinds of advertising, both online and offline, and hence the constraint these other forms of advertising impose on the display advertising market.

The Texas Complaint refers to a short-lived 2020 advertiser boycott of Facebook as a "natural experiment" to suggest that owned-and-operated display ads are not substitutable for open-display ads.[88] Because the boycott occurred in the middle of the COVID-19 pandemic, when many large advertisers were reducing their advertising spending, it is unlikely this experience provides any useful information in evaluating the antitrust-relevant market.[89] Indeed, the Texas Complaint makes little attempt to consider alternative forms of *display* advertising, such as in-feed ads on Instagram or Twitter. It is, at the very least, *possible* that advertisers who choose to place ads on third-party websites may switch to other forms of advertising if the price of third-party website advertising were above competitive levels. To ignore this possibility, as the Texas Complaint does, is to ignore the purpose of defining the relevant antitrust market altogether.

V. Conclusion

When a firm is accused of illegal monopolization, it is crucial—not just to the question of liability, but also the question of potential consumer harm—to determine the market in which the alleged market power is being exercised.

In many cases, producers have one view of the "market," consumers have another, and enforcers have yet another. In digital advertising, advertisers may have one concept of the market, publishers may have another, and users viewing ads may have yet another. In addition, intermediaries can have their own view of the market, as may other media such as TV, newspapers, and magazines. Regulators and enforcers may have a view of the market that differs significantly from all these groups.

As such, there is a real risk of conflating participants' casual conceptions of the "market" with an economic determination relevant for antitrust analysis.[90] How the participants see themselves is irrelevant for antitrust; what is important is how advertisers would respond in the face on an increase

---

[87] *See* Geoffrey A. Manne, Dirk Auer, Brian C. Albrecht, Eric Fruits & Lazar Radic, *Comments of the International Center for Law and Economics on the DOJ-FTC Request for Information on Merger Enforcement* (2022), *available at* https://papers.ssrn.com/sol3/papers.cfm?abstract_id=4090844 ("Unfortunately, far from resolving the problems associated with measuring market power in digital markets (and of defining relevant markets in antitrust proceedings), this proposed solution would merely focus investigations on subjective and discretionary factors.... This is a poor way to delineate relevant markets. It wrongly portrays competitive constraints as a binary question, rather than a matter of degree. Pointing to the functional differences that exist among rival services mostly fails to resolve this question of degree.").

[88] Texas Complaint at ¶ 175, 206.

[89] Tiffany Hsu and Eleanor Lutz, *More Than 1,000 Companies Boycotted Facebook. Did It Work?*, NEW YORK TIMES (Aug. 1, 2020, updated Oct. 5, 2021), https://www.nytimes.com/2020/08/01/business/media/facebook-boycott.html.

[90] *See* Geoffrey A. Manne & E. Marcellus Williamson, *Hot Docs vs. Cold Economics: The Use and Misuse of Business Documents in Antitrust Enforcement and Adjudication*, 47 ARIZ. L. REV. 609, 619-24 (2005) (discussing the disconnect between business knowledge and economic reality).

in price for open-display ads or how publishers would respond in the face of a decrease in the revenues they receive from serving display ads.

If advertisers faced with higher advertising costs for open-display ads would shift to owned-and-operated display ads or to search ads or to other media altogether, then these alternatives must be included in the relevant antitrust market. Similarly, if publishers faced with declining open-display ad revenues would quickly shift to alternative such as direct placement of ads or sponsorships, then these alternatives must be included in the relevant market, as well.

If advertisers and publishers are faced with a wide range of viable alternatives and the market is broadly defined to include these alternatives, then it is not clear that any single firm can profitably exercise monopoly power—no matter what its market share is in one piece of the broader market. Similarly, it is not clear whether "consumers" (e.g., advertisers, publishers, or users) have suffered any economic harm.

U.S. regulators have a history of attempting to narrowly define markets in order to show dominance in that narrow market. This may result in a "win" for the regulator at the liability stage. It may result in fines, as well as behavioral or structural remedies that harm the defendant and help its competitors. But if the narrow market definition is wrong, the regulators' victory may be meaningless to consumers, who never see reduced prices, increased output, or improved product quality resulting from the supposed "win."

This is the risk with the current cases (and many of the analyses) involving digital advertising. With a narrow focus on "open display," it is quite possible that Google's dominance can be technically demonstrated. But if, as suggested here, "open display" is really just a small piece of larger relevant market, then any fines and remedies resulting from an erroneously narrow market definition are as likely to raise the cost of business for advertisers, publishers, and intermediaries as they would be to increase competition that benefits market participants.

As the Texas case and the anticipated DOJ case work their ways through the legal system, the courts' treatment of the antitrust-relevant market can provide much-needed guidance on market definition, or serve as a cautionary tale against rejecting economics in favor of politics.